Implementation of 7-Segment Display Decoder

Objectives:

1. To understand the working principle of 7-Segment Display Decoder
2. To design and implement 7-Segment Display Decoder using logic gates and verify their operation through truth tables.

Basic Theory:

7-Segment Display Decoder:

A display decoder is used to convert a BCD or a binary code into a 7 segment code. It generally has 4 input lines and 7 output lines. Generally, LCD and LED segments provide the display output of numerical numbers and characters.

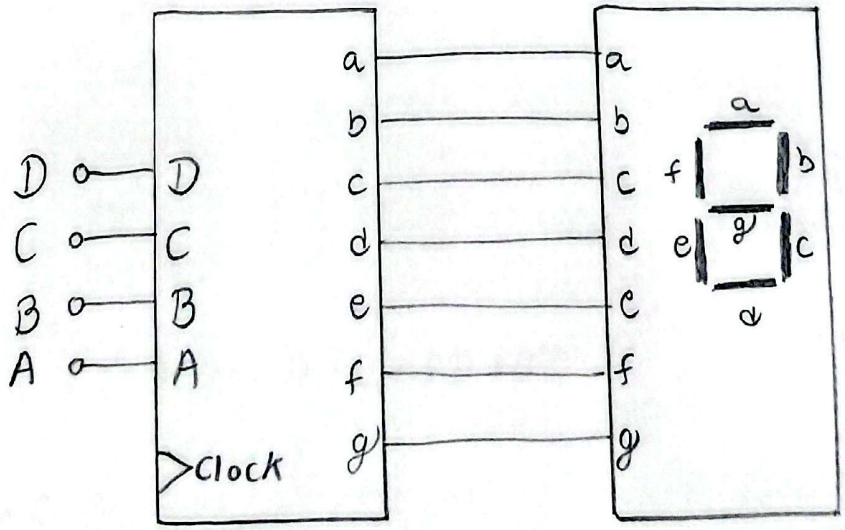

BCD to 7 Segment Decoder

7-Segment LED Display

Truth Table:

Decimal Digit	Input lines				Output lines							Display Patterns
	A	B	C	D	a	b	c	d	e	f	g	
0	0	0	0	0	1	1	1	1	1	1	0	0
1	0	0	0	1	0	1	1	0	0	0	0	1
2	0	0	1	0	1	1	0	1	1	0	1	2
3	0	0	1	1	1	1	1	1	0	0	1	3
4	0	1	0	0	0	1	1	0	0	1	1	4
5	0	1	0	1	1	0	1	1	0	1	1	5
6	0	1	1	0	1	0	1	1	1	1	1	6
7	0	1	1	1	1	1	1	0	0	0	0	7
8	1	0	0	0	1	1	1	1	1	1	1	8
9	1	0	0	1	1	1	1	1	0	1	1	9

K-Map:

for a

AB \ CD	00	01	11	10
00	1		1	1
01		1	1	1
11	X	X	X	X
10	1	1	X	X

$F(ABCD) = A + C + BD + B'D'$

for b

AB \ CD	00	01	11	10
00	1	1	1	1
01	1		1	
11	X	X	X	X
10	1	1	X	X

$F(ABCD) = B' + C'D' + CD$

for C

AB \ CD	00	01	11	10
00	1	1	1	
01	1	1	1	1
11	X	X	X	X
10	1	1	X	X

$F(ABCD) = B + D + C'$

for d

AB \ CD	00	01	11	10
00	1		1	1
01		1		1
11	X	X	X	X
10	1	1	X	X

$F(ABCD) = A + B'D' + B'C + CD' + BC'D$

for e

AB \ CD	00	01	11	10
00	1			1
01				1
11	X	X	X	X
10	1		X	X

$F(ABCD) = CD' + B'D'$

for f

AB \ CD	00	01	11	10
00	1			
01	1	1		1
11	X	X	X	X
10	1	1	X	X

$F(ABCD) = A + BC' + BD' + C'D'$

for g

AB \ CD	00	01	11	10
00			1	1
01	1	1		1
11	X	X	X	X
10	1	1	X	X

$F(ABCD) = A + B'C + BC' + CD'$

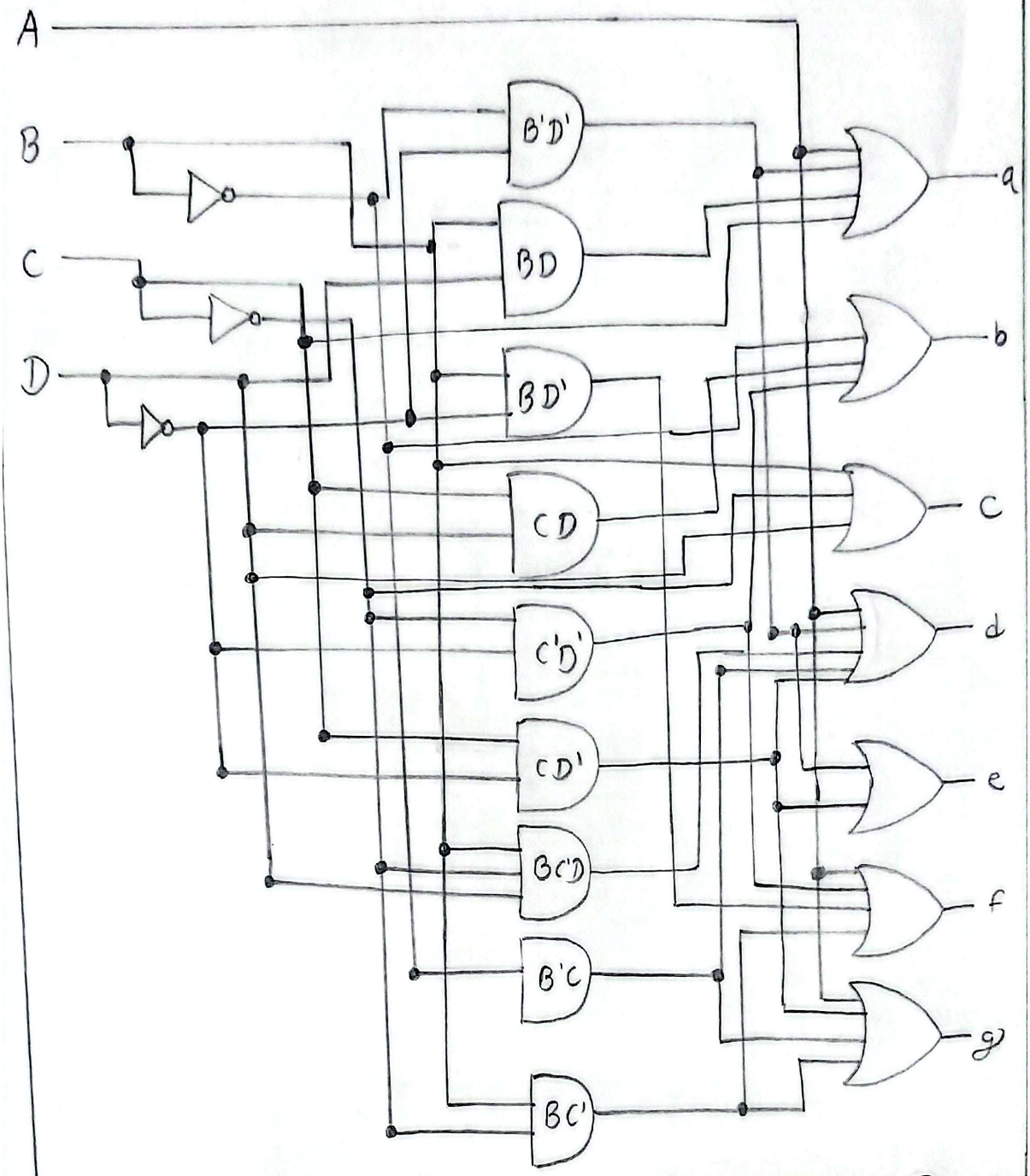

fig. Logic Diagram of Seven Segment Decoder

Diagrams and Observation :

Objective 1 : Building a 7-Segment Decoder using NOT, AND and OR Gate.

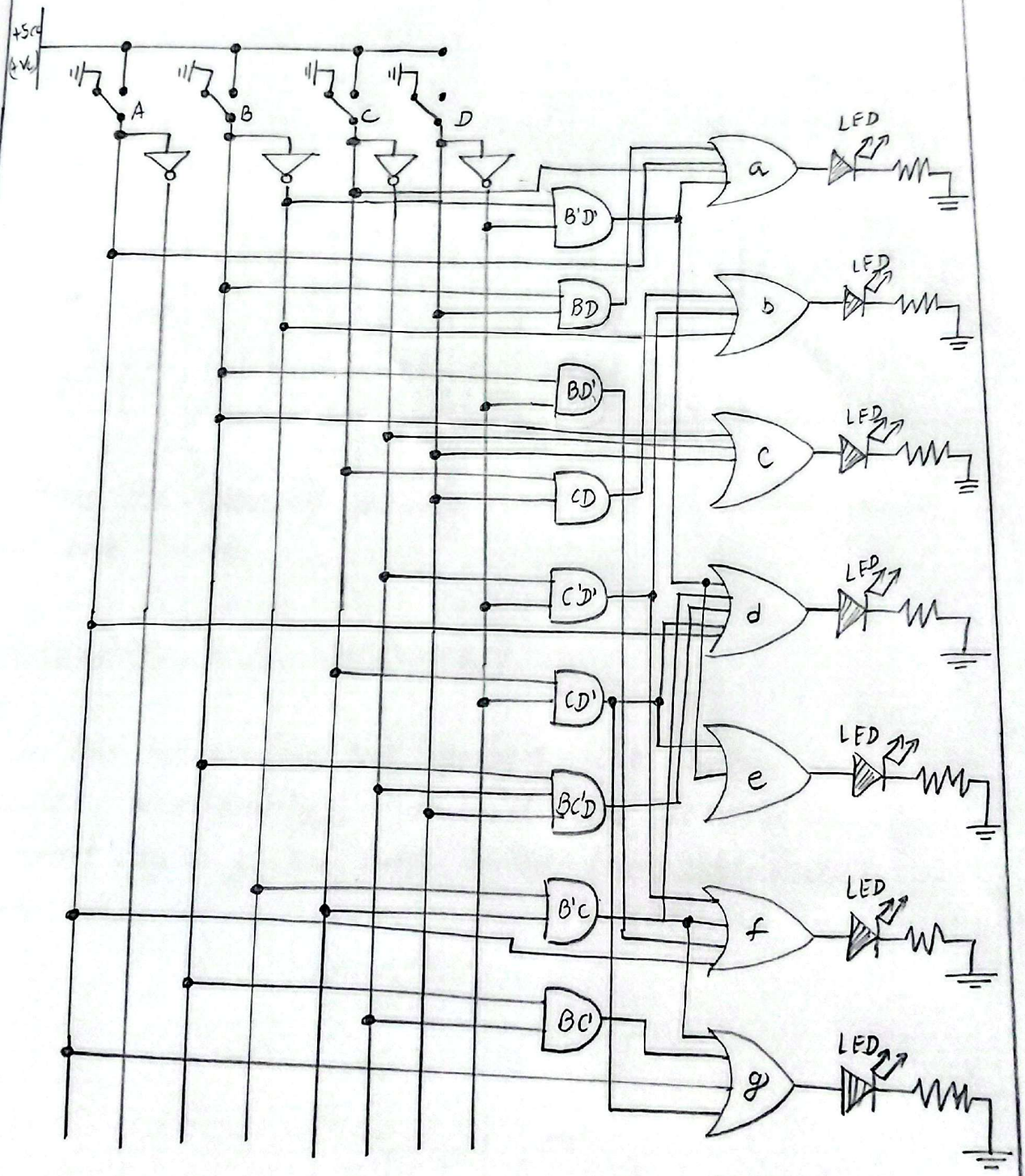

Truth Table:

Digital Digit	Input lines				Exp. Output line							Observed Output line						
	A	B	C	D	a	b	c	d	e	f	g	a	b	c	d	e	f	g
0	0	0	0	0	1	1	1	1	1	1	0	1	1	1	1	1	1	0
1	0	0	0	1	0	1	1	0	0	0	0	0	1	1	0	0	0	0
2	0	0	1	0	1	1	0	1	1	0	1	1	1	0	1	1	0	1
3	0	0	1	1	1	1	1	1	0	0	1	1	1	1	1	0	0	1
4	0	1	0	0	0	1	1	0	0	1	1	0	1	1	0	0	1	1
5	0	1	0	1	1	0	1	1	0	1	1	1	0	1	1	0	1	1
6	0	1	1	0	1	0	1	1	1	1	1	1	0	1	1	1	1	1
7	0	1	1	1	1	1	1	0	0	0	0	1	1	1	0	0	0	0
8	1	0	0	0	1	1	1	1	1	1	1	1	1	1	1	1	1	1
9	1	0	0	1	1	1	1	1	0	1	1	1	1	1	1	0	1	1

Hence, The Observed results and the expected results are the Same.

Discussion and Conclusion:

In this lab session, we verified the seven segment decoder functionality, and built the decoder using different logic gates and listed the observation in truth table.